TOTALGAZ INDUSTRIE

GAS PRESSURE REGULATOR RTG 406 AI

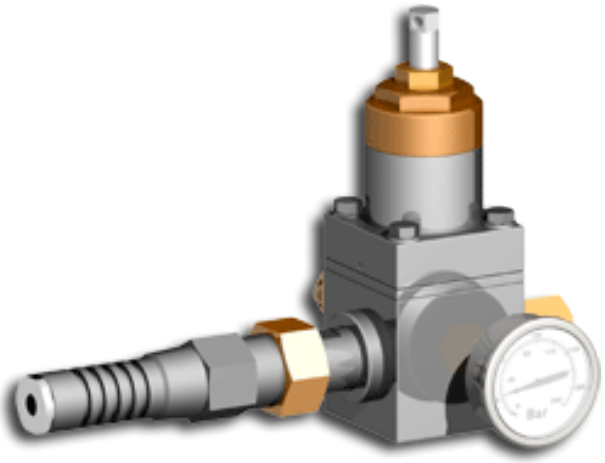

INTRODUCTION

The anti-frost gas pressure regulator operates having the connection screwed in the joint sleeve on the gas transportation pipeline. The part of the connection (radiator) placed inside the pipeline together with the seat are heated by the gas flowing through the pipeline. Thus, water freezing and hydrate formation are prevented. RTG 406 AI regulators are of direct action type and are intended for low flow rates. The regulators are used for reducing and regulating the pressure of natural gases and LPG and they ensure constant maintenance of outlet pressure within the regulation class limits, irrespective of the variations of inlet pressure and flow rate. They are designed for natural gas transportation and distribution networks.

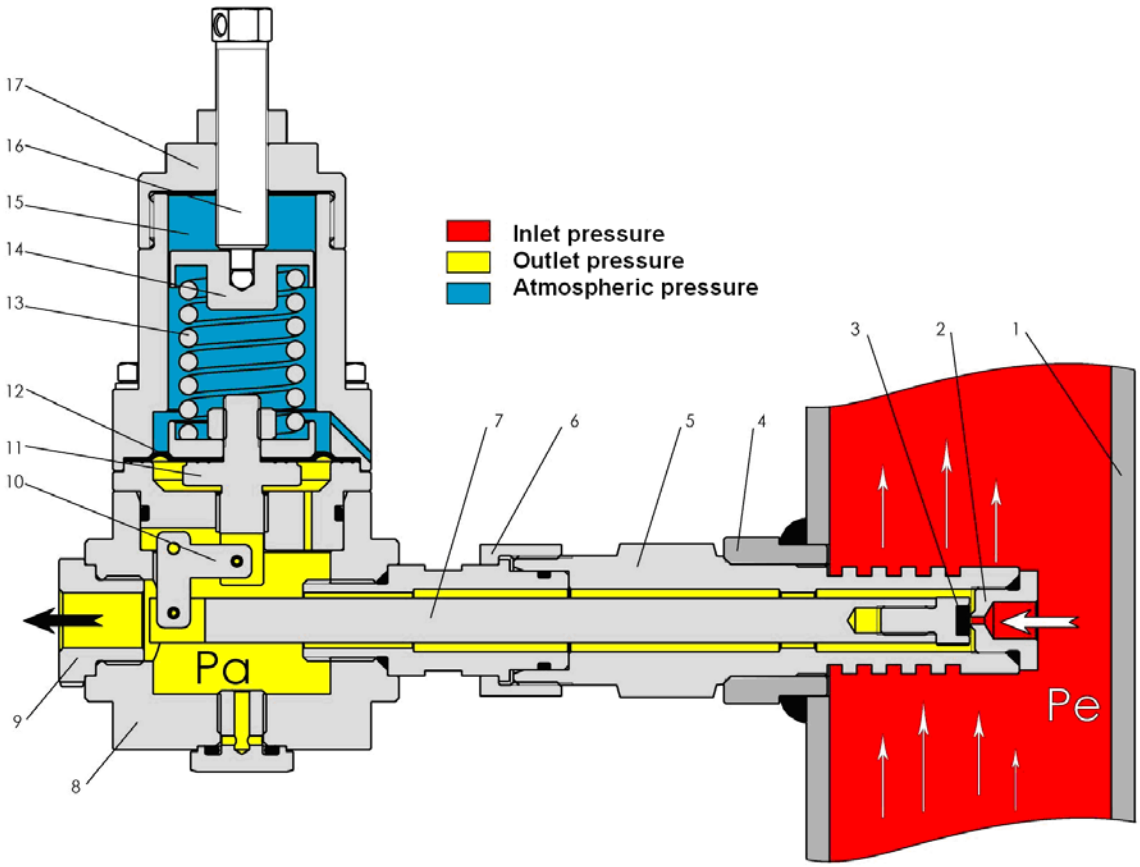

Figure 1 - RTG 406 AI (anti-frost)

1. Pipeline; 2. Seat; 3. Valve plate; 4. Joint sleeve; 5. Connection; 6. Connection nut; 7. Pusher post; 8. Body; 9. Gas outlet; 10. Lever; 11. Control rod; 12. Control diaphragm; 13. Adjustment spring; 14. Spring disk; 15. Upper cover; 16. Adjustment screw; 17. Spring cover

RTG 406 AI regulator operation

The regulator operation is explained on the basis of the diagram in Figure 1.

RTG 406 AI anti-frost regulator is of normally open type.

The gas flows through the seat (2) reaching below the valve plate (3), then flows through the space between the rod (7) and the connection (5) and enters the body (8). From here, the gas enters the space below the control diaphragm (12).

The force generated by the pressure on the control diaphragm surface balances the force exerted by the adjustment spring (13).

The control rod (11) determines the pusher post (7) to move by means of the lever (10).

The gas is delivered to consumer via the gas outlet (9).

Optionally, a relief valve and a pressure gauge can be connected to the G ¼" threaded holes on the body lateral surfaces.

Technical characteristics

Design characteristics:

- Normally open
- Closure at zero flow
- Incorporated relief valve (optionally)

Table 1 – Main characteristics

Main characteristics	**RTG 406 AI**
Connection design pressure P_{ZUL}[bar]	200
Inlet pressure P_e [bar]	2 ÷200
Outlet pressure P_a [bar]	0.5 ÷ 16 (depending on model)
Accuracy class AC	up to ± 10 ÷ 20 %
Closing pressure class SG	up to 20 ÷ 30%
Flow coefficient Cg	3
Connection type – threaded connection	kG1"× G1/4" kG1"× G3/8"
Connection angle	in line or 90° (depending on model)
Measuring line	internal
Seat diameter [mm]	2
Overall dimensions [mm]	70×265×207
Relief valve: relief pressure P_d [bar]	1.2 ÷ 23

Materials

Corrosion resistant materials are used for the construction of RTG 406 AI anti-frost regulator.

Table 2 - Materials

Part	Material
Connection	AISI 316
Body	EN AW 6082T6
Seat	AISI 316
Rod	Cuzn39 Pb2
Cover	EN AW-6082T6
Valve plate	Polyurethane
Diaphragm	Rubber (NBR) with textile insert
O-rings	Rubber (NBR) or Viton

Flow rate determination

Use the following formula to determine the maximum flow rate:

In subcritical conditions, for $\frac{P_a}{P_e} \geq 0{,}5$

$$Q = \frac{13{,}94}{\sqrt{d \cdot (t_e + 273)}} \cdot C_g \sqrt{(P_e - P_a) \cdot P_a}$$

Symbols:

Q – flow rate [Nm^3/h]

P_e – absolute inlet pressure [bar]

P_a – absolute outlet pressure [bar]

C_g – air flow coefficient [Nm^3/h]

d – specific gravity (for air d = 1)

t_e – natural gas temperature at regulator inlet

The specific gravities for other working media are listed in Table 3.

Table 3 – Gas specific gravity

Gas type	Specific gravity
Air	1.00
Propane	1.53
Butane	2.00
Nitrogen	0,97
Oxygen	1.14
Carbon dioxide	1.52

Safety devices and optional accessories

SD 731 G ¼ P relief valve operation

The relief valve operation is explained on the basis of the diagram in Figure 2.

The working position of SD 731 G ¼ P is normally closed [the seat (3) seals on the valve plate (2)]. The “PI” chamber (high pressure) has the line pressure.

The control spring is adjusted to prevent the seat (3) movement under normal working conditions. The “PA” chamber contains atmospheric pressure.

When the pressure increases above the preset value, the force generated by the pressure overcomes the force exerted by the spring (4). The seat (3) movement determines the loss of tightness; thus, the valve discharges the fluid into the atmosphere.

When the pressure decreases below the preset value, the tightness is restored (the valve does not discharge the fluid).

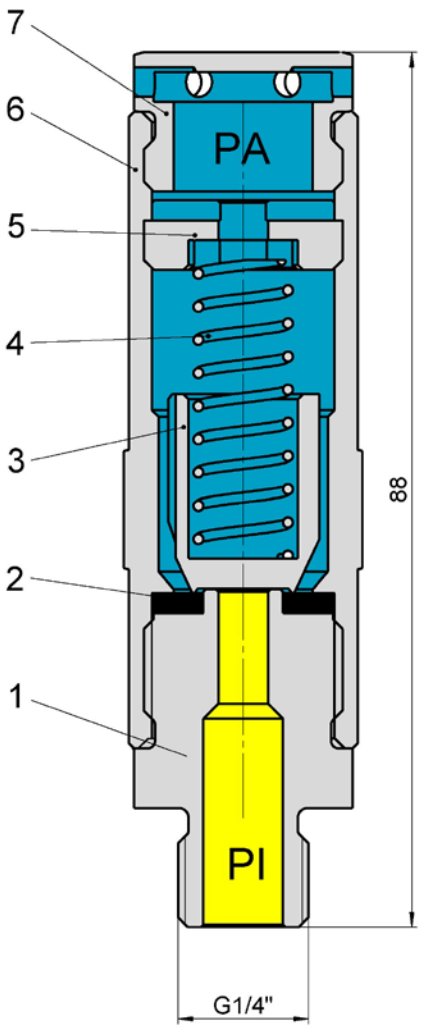

Figure 2 - SD 731 G ¼ P

1. Connection
2. Valve plate
3. Seat
4. Spring
5. Adjustment nut
6. Body
7. Cover

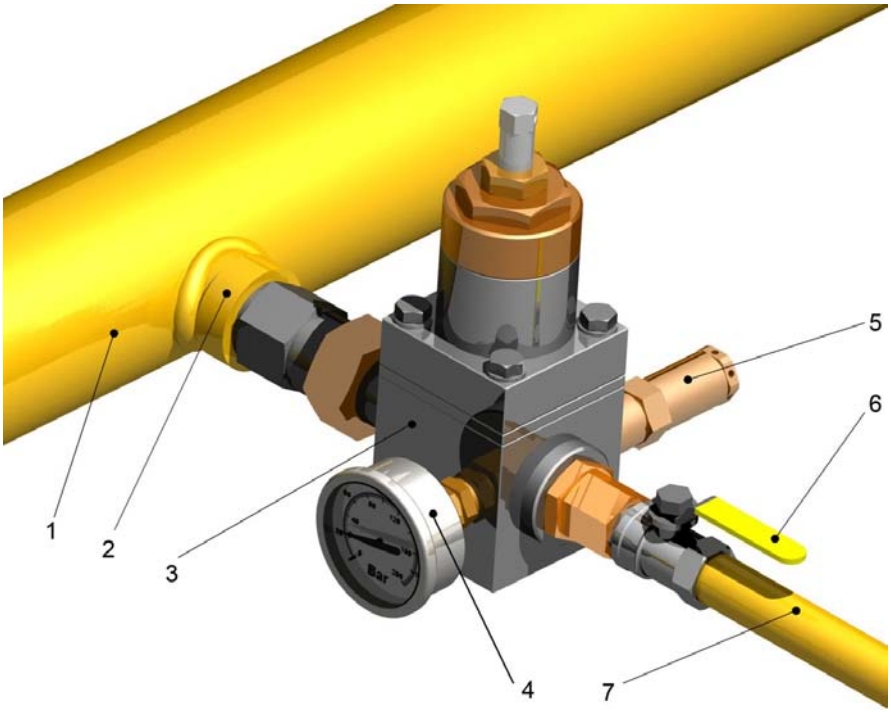

Figure 3 - RTG 406 AI assembly variant and accessories

1. Gas transportation pipeline
2. Joint sleeve
3. RTG 406 AI regulator
4. Pressure gauge
5. SD 731 G ¼ P relief valve
6. Valve
7. Gas outlet

RTG 406 AI and SD 731 G ¼ P adjustment springs

Table 4 – RTG 406 AI and SD 731 G ¼ P relief valve adjustment springs

Equipment	Spring code	Setting range [bar]
RTG 406 AI	1450237	0.5 ÷ 1.4
	1450238	1 ÷ 2.4
	1450239	3 ÷ 5
	1450240	4 ÷10
	1450241	6 ÷16
SD 731 G ¼ P	1450242	1.2 ÷ 4.9
	1450243	1.6 ÷ 2.7
	1450244	2.7 ÷ 6.2
	1450245	4.7 ÷ 10.9
	1450246	6.6 ÷ 15.5
	1450247	10.0 ÷ 23.4

Overall dimensions

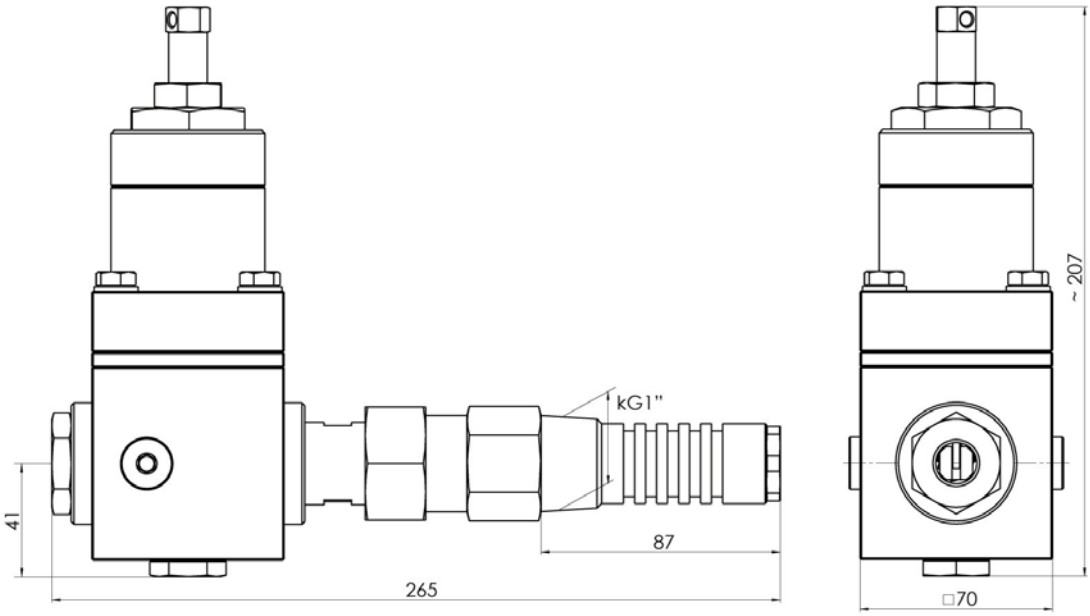

Figure 4 - RTG 406 AI – Dimensional characteristics

The manufacturer reserves the right to make modifications without any prior notification.

CT No. 200 / 2009 / 01

TOTALGAZ INDUSTRIE
Nr. R.C.: J-22-3277/1994
CUI: RO6658553

IBAN: RO28BRDE240SV13842272400
B.R.D. G.S.G. Iaşi

Şos. Păcurari, nr. 128,
Iaşi, cod 700545, România
Tel. : 0040-232-216.391(2)
Fax : 0040-232-215.983
E-mail: office@totalgaz.ro
Web: www.totalgaz.ro

Certified Management System